Rewarding Learning

Centre Number

Candidate Number

General Certificate of Secondary Education
2022

Biology

Unit 3 Practical Skills
Booklet B
Higher Tier

[GBL34]

GBL34

MONDAY 27 JUNE, MORNING

TIME

1 hour.

INSTRUCTIONS TO CANDIDATES

Write your Centre Number and Candidate Number in the spaces provided at the top of this page.
You must answer the questions in the spaces provided.
Do not write outside the boxed area on each page or on blank pages.
Complete in black ink only. **Do not write with a gel pen.**
Answer **all eight** questions.

INFORMATION FOR CANDIDATES

The total mark for this paper is **70**.
Figures in brackets printed down the right-hand side of pages indicate the marks awarded to each question or part question.
Quality of written communication will be assessed in Question **5(c)**.

13188

24GBL3401

1 **(a)** A student carried out an experiment to find out the energy content of three different foods.

The diagram shows the apparatus the student used.

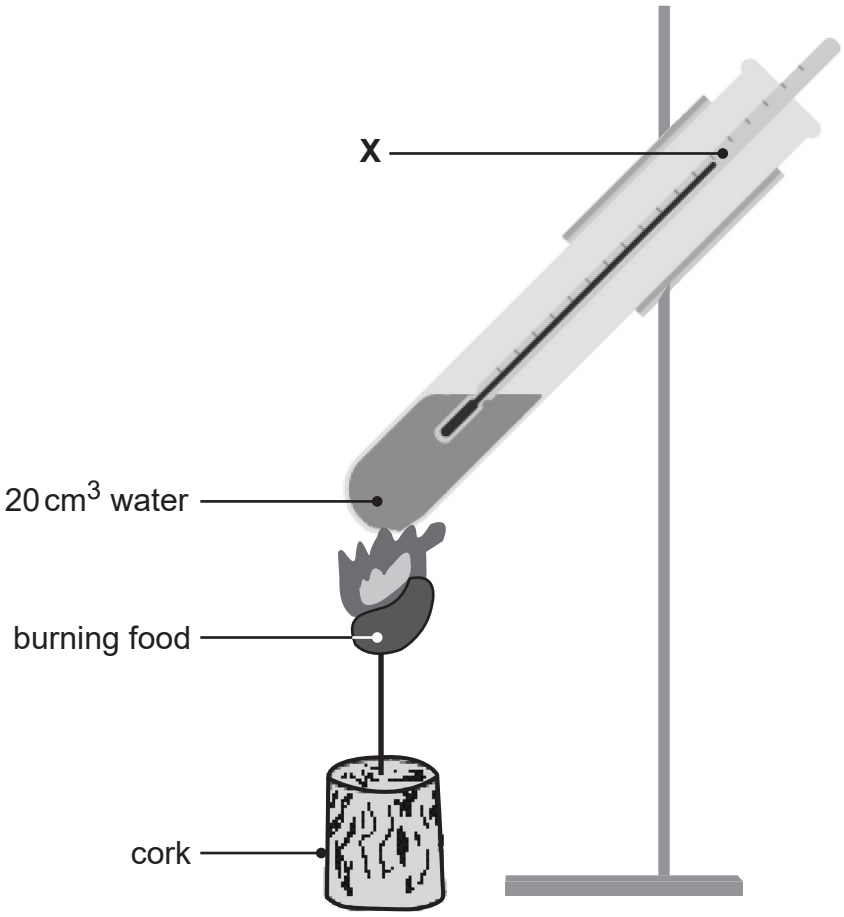

Source: Principal Examiner

(i) Name apparatus **X**.

_____ [1]

(ii) Name the apparatus the student could have used to accurately measure 20 cm^3 of water.

_____ [1]

(b) The table shows the student's results.

Food	Initial temperature of water / °C	Final temperature of water / °C	Change in temperature of water / °C
Biscuit	22	70	48
Bread	22	51	
Pasta	22	45	23

(i) **Complete the table** by calculating the change in temperature of the water when the bread was burned.

[1]

(ii) Give the independent variable in this experiment.

_____ [1]

(iii) The student burned the same mass of each food.

Explain why.

_____

_____ [1]

Fat contains more energy per gram than carbohydrate.

(c) Suggest which of these foods a person on a low fat diet should choose to eat.

Use evidence from the table to help explain your answer.

Food _____ [1]

Explanation _____

_____

_____

_____ [2]

13188

2 **(a)** A group of pupils investigated the effect of light intensity on the rate of photosynthesis.

The diagram shows the apparatus they used.

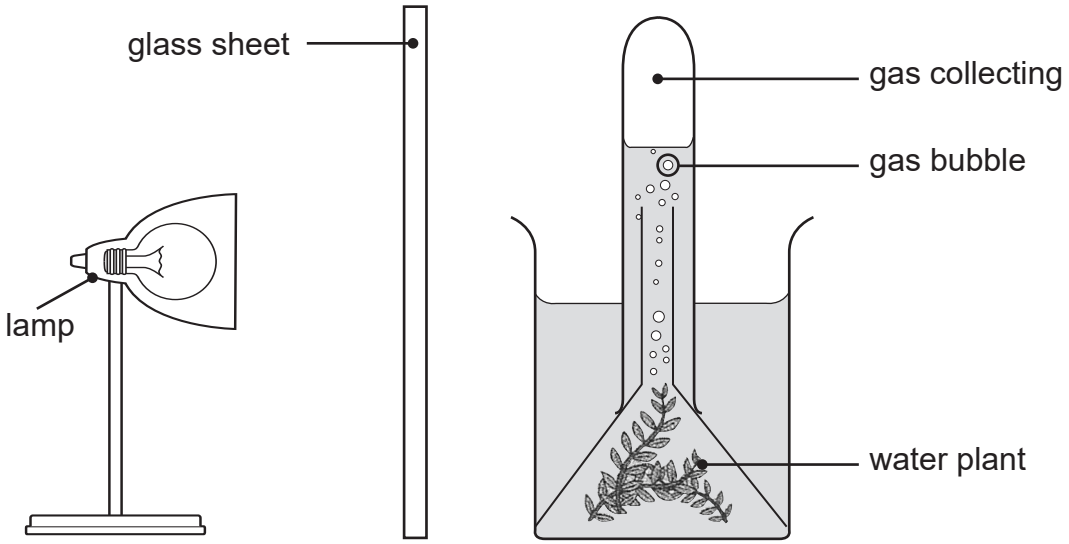

Source: Chief Examiner

(i) Name the gas collecting in the test tube.

_____ [1]

(ii) Suggest the function of the glass sheet and explain why this is necessary.

_____

_____

_____

_____

_____ [2]

[Turn over

The pupils placed the lamp at different distances from the plant and counted the number of gas bubbles given off by the plant in one minute.

The table shows their results.

Distance of the lamp from the plant / mm	Number of gas bubbles given off in one minute
50	18
100	14
150	9
200	5
250	3

The number of gas bubbles given off in one minute is a measure of the rate of photosynthesis of the plant.

Look at the table.

(b) Describe and explain the trend shown in the results.

_____

_____

_____

_____

_____

_____

_____

_____ [3]

(c) Suggest **two** reasons why counting the number of gas bubbles is **not an accurate** method of measuring the rate of photosynthesis.

1. _____

_____

2. _____

_____ [2]

(d) **(i)** Suggest a suitable control experiment for this investigation.

_____

_____ [1]

(ii) Explain why this control experiment is necessary.

_____

_____ [1]

3 The photograph shows onion cells being viewed under a light microscope.

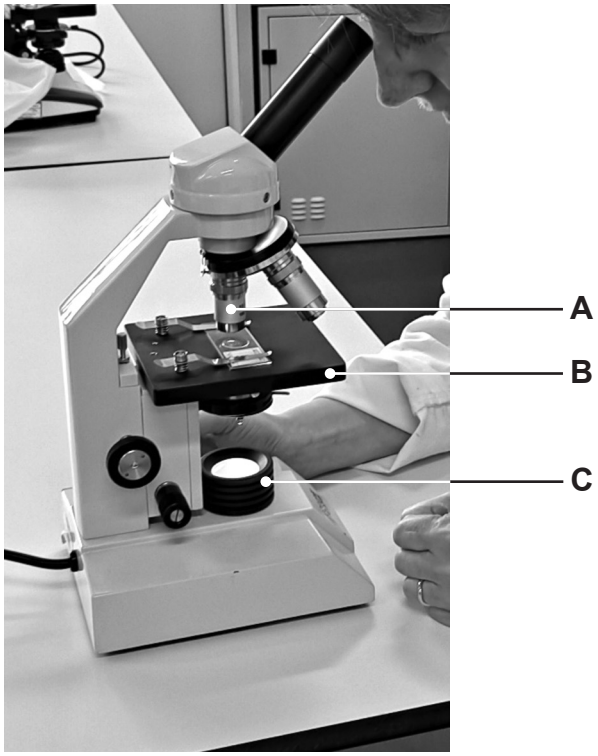

Source: Principal Examiner

(a) Name parts **A**, **B** and **C**.

A _____

B _____

C _____ [3]

(b) What should be added to the onion cells so the nuclei can be seen more clearly?

_____ [1]

(c) The photograph shows some of the onion cells viewed under the light microscope.

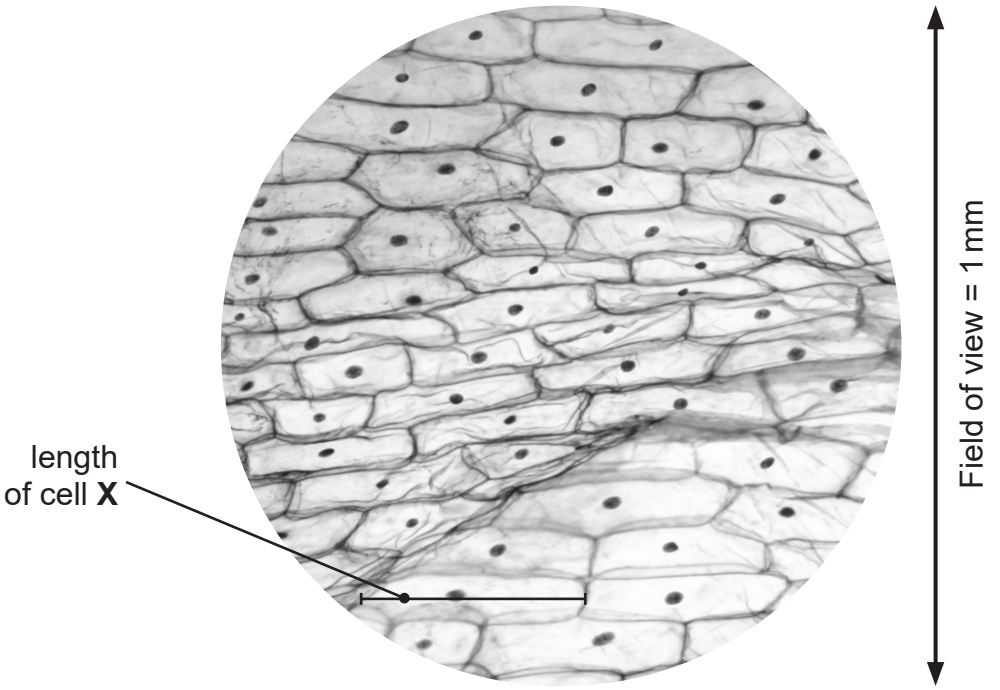

© Getty Images

(i) Use the field of view line to help **estimate** the height of an onion cell in the photograph.

Show your working.

_____ mm [2]

The magnification of the onion cells was **× 100**.

(ii) **Calculate** the actual length of cell **X** and give your answer in **micrometres**.

Show your working.

_____ micrometres [3]

[Turn over

4 A group of pupils investigated the effect of different minerals on the growth of wheat seedlings.

They placed wheat seedlings in test tubes containing different mineral solutions.

The diagram shows one of the test tubes at the start of the investigation.

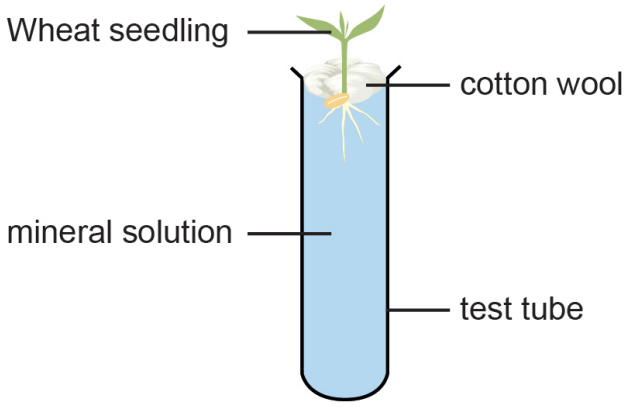

The wheat seedlings were grown for six weeks in the test tubes containing different mineral solutions.

The table shows the results.

	Test tubes		
	1	**2**	**3**
Contents of mineral solution	mineral solution with all minerals present	mineral solution with only nitrate missing	mineral solution with only magnesium missing
Diagram			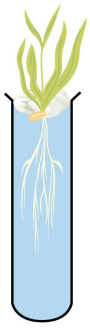
Result after six weeks	healthy growth	poor growth	yellow leaves, reduced growth

(a) Suggest **two** ways the pupils could have measured the growth of the seedlings.

1. _____

_____

2. _____

_____ [2]

(b) Apart from nitrate and magnesium, name **one other** mineral present in the mineral solution in **test tube 1**.

_____

_____ [1]

(c) Explain why the lack of nitrate results in poor growth of the seedling in **test tube 2**.

_____

_____ [1]

(d) Explain the result for the seedling in **test tube 3**.

_____

_____

_____

_____

_____ [3]

5 A student investigated a factor needed for photosynthesis.

He destarched a plant with variegated leaves and then placed the plant in bright light for several hours.

He then tested one of the variegated leaves for starch.

The photograph shows the leaf at the end of the starch test.

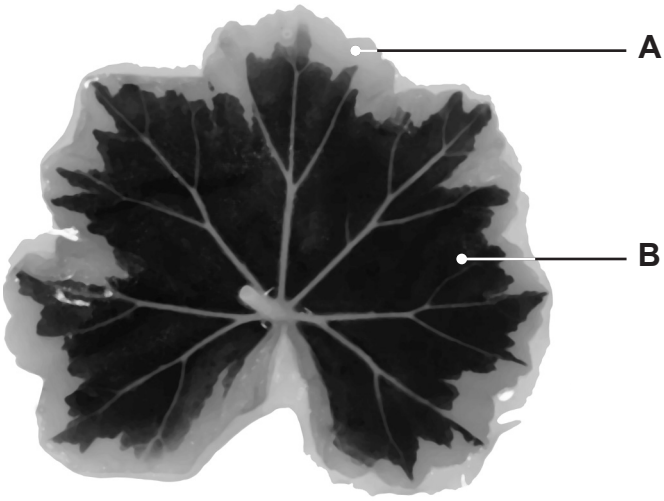

Source: Principal Examiner

(a) Describe how the student destarched the plant.

_____

_____ [2]

(b) Complete the table.

Area of leaf	Colour of leaf	
	Before starch test	**After starch test**
A	white	
B		blue-black

[2]

13188

(c) Before testing a leaf for starch, the student carried out a risk assessment.

He identified broken glass as a possible hazard which could result in him cutting himself. To minimise this risk, he was careful to avoid breakages.

Identify **three other** possible hazards in this experiment and the associated risks.

Describe the steps taken to minimise these risks.

In this question, you will be assessed on your written communication skills and your use of specialist scientific terms.

[6]

[Turn over

6 An investigation was carried out to compare the effect of different durations of exercise on the heart rate of three pupils.

The table shows their heart rates at rest and after exercise.

	Heart rate of pupil / beats per minute	
Pupil	At rest	After exercise
A	78	100
B	77	120
C	90	122

One pupil exercised for **two** minutes, one pupil exercised for **five** minutes and one pupil exercised for **ten** minutes.

(a) Use the data in the table to suggest the duration of exercise carried out by each pupil.

Pupil **A** _____ minutes.

Pupil **B** _____ minutes.

Pupil **C** _____ minutes. [2]

One variable which the pupils controlled was the type of exercise.

(b) Suggest **two other** variables which the pupils should have controlled in this investigation.

1. _____

2. _____ [2]

(c) Give **two** other short-term effects and **one** long-term effect of exercise on the body.

Short-term 1. _____

_____

2. _____

_____

Long-term 1. _____

_____ [3]

BLANK PAGE

DO NOT WRITE ON THIS PAGE

7 A student investigated the effect of three different antibiotics **A**, **B** and **C** on the growth of one type of bacteria.

(a) What is an antibiotic?

_____

_____

_____ [2]

(b) The student inoculated three agar plates with the bacteria.

(i) Explain why the student worked beside a lit Bunsen burner while inoculating the plates.

_____

_____

_____

_____

_____ [2]

(ii) What term is used to describe this type of technique?

_____ [1]

The student then placed an E-strip on each agar plate.

An E-strip is a plastic strip which contains one type of antibiotic.

There is an increasing concentration of antibiotic along the length of the strip.

The diagram shows one of the agar plates the student set up.

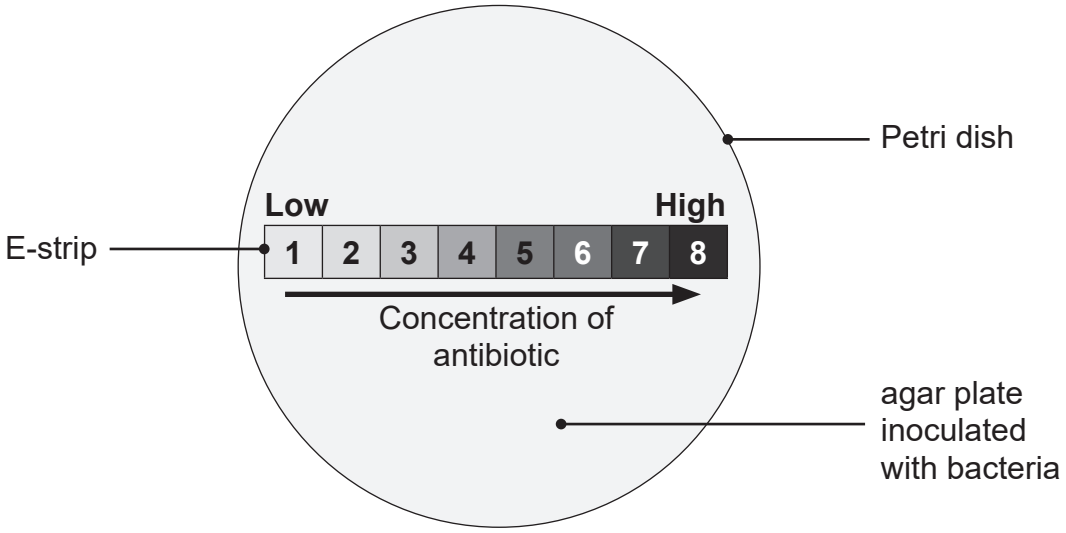

Source: Principal Examiner

(c) The student incubated the agar plates for 24 hours at a temperature which is safe to use in schools.

(i) Give the temperature the student should have used.

_____ °C [1]

(ii) Explain why the student did not incubate the agar plates above or below this temperature.

Above _____

_____

Below _____

_____ [2]

(d) The diagram shows the results of the investigation.

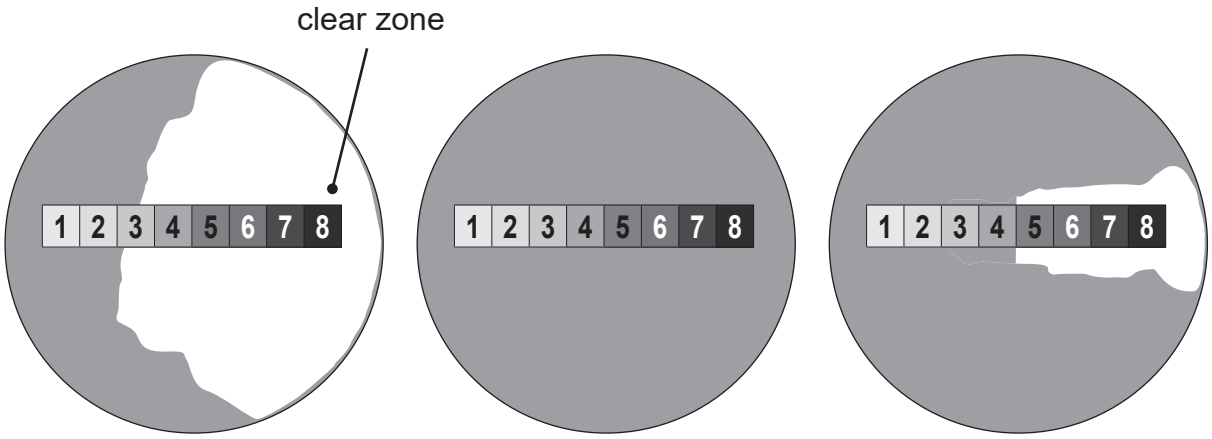

Antibiotic **A** Antibiotic **B** Antibiotic **C**

Source: Principal Examiner

(i) Suggest why clear zones form around the E-strips on agar plates **A** and **C** after 24 hours.

_____

_____

_____ [2]

(ii) Suggest the two concentrations of antibiotic **A** which should **not** be used to treat a person infected with this type of bacteria.

Explain your answer.

Concentration _____ and _____

Explanation _____

_____

_____

_____ [3]

[Turn over

8 A student investigated osmosis.

The diagram shows the apparatus she used.

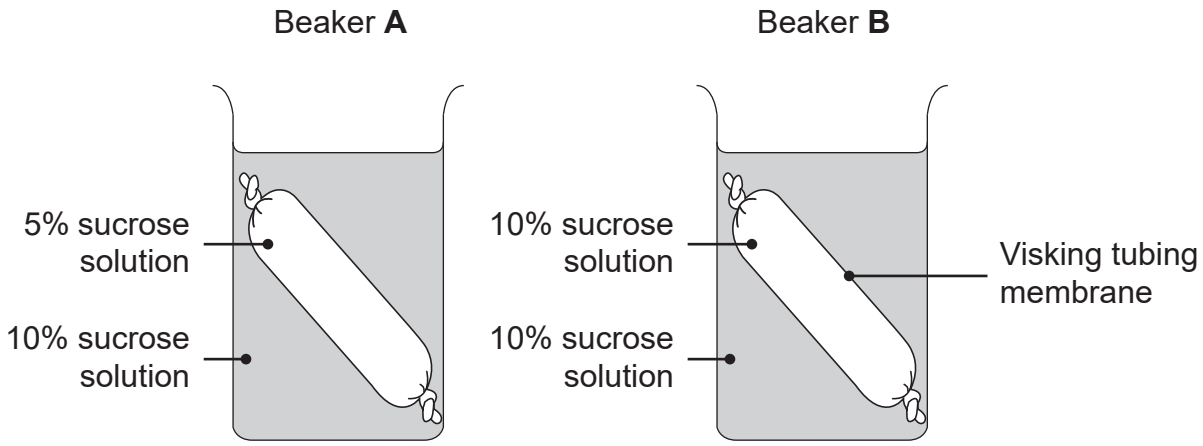

Visking tubing membrane is selectively permeable.

(a) Explain what is meant by selectively permeable.

_____

_____ [1]

The student weighed the Visking tubing in each beaker at the start and after 24 hours.

The table shows her results.

	Mass of Visking tubing / g	
	At the start	**After 24 hours**
Beaker **A**	112	87
Beaker **B**	141	141

(b) Describe and explain the results for the Visking tubing in beakers **A** and **B** after 24 hours.

Beaker **A** _____

_____

_____

_____

_____

_____

_____

_____

Beaker **B** _____

_____

_____

_____

_____

_____ [5]

THIS IS THE END OF THE QUESTION PAPER

BLANK PAGE

DO NOT WRITE ON THIS PAGE

BLANK PAGE

DO NOT WRITE ON THIS PAGE

Sources:

Q3c.....© Getty Images
Q8....."Reproduced with permission of the Licensor through PLSclear."
CCEA GCSE Biology Third Edition by J. Napier and D. Boyd (ISBN: 9781471892158)
Published 2017 © Hodder Education

All other images.....CCEA

DO NOT WRITE ON THIS PAGE

For Examiner's use only	
Question Number	Marks
1	
2	
3	
4	
5	
6	
7	
8	
Total Marks	

Examiner Number

Permission to reproduce all copyright material has been applied for.
In some cases, efforts to contact copyright holders may have been unsuccessful and CCEA will be happy to rectify any omissions of acknowledgement in future if notified.